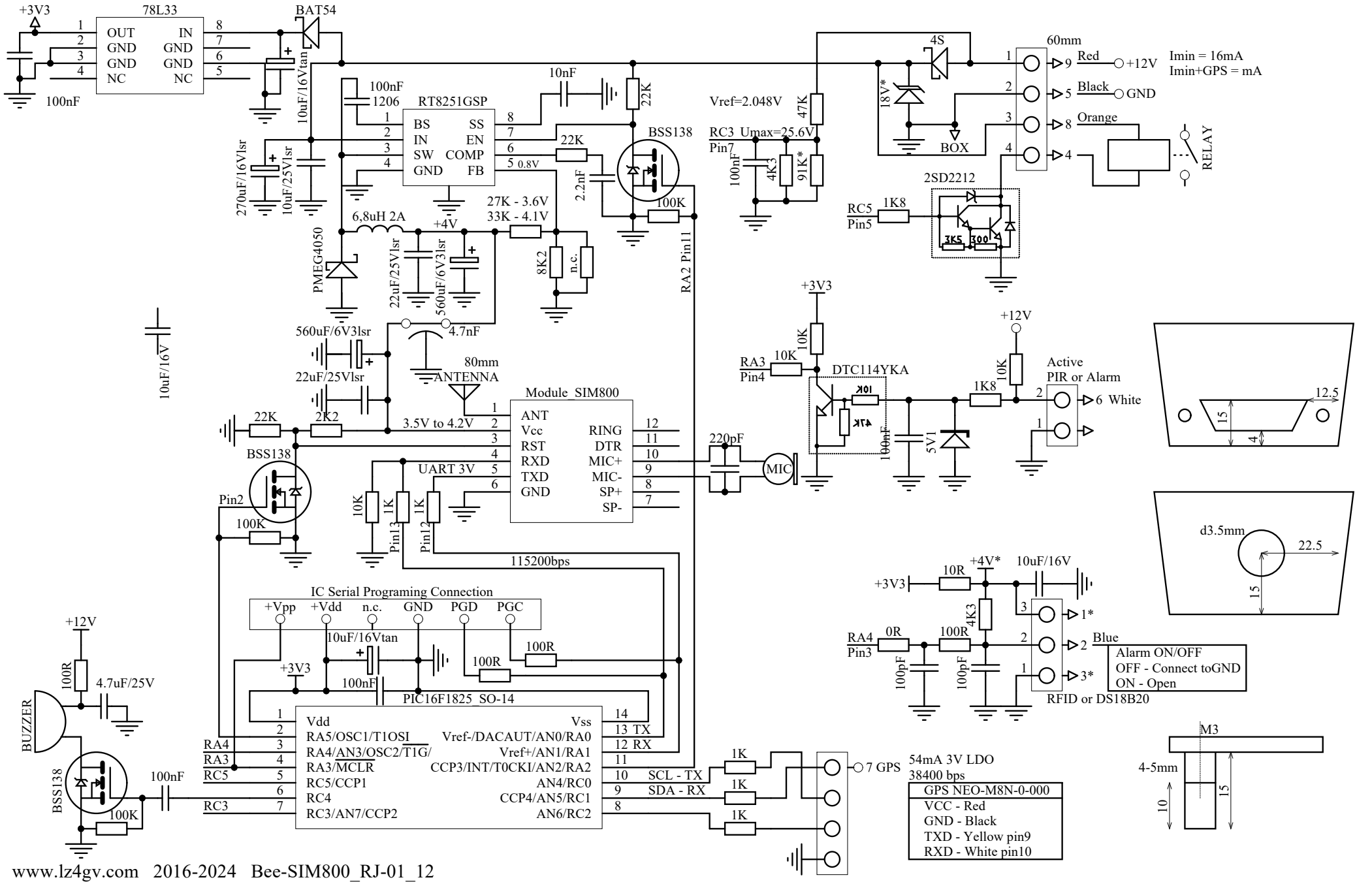


www.lz4gv.com 2016-2024 Bee-SIM800_RJ-01_12